## G301

NOTE: Wires shown without color codes are black.

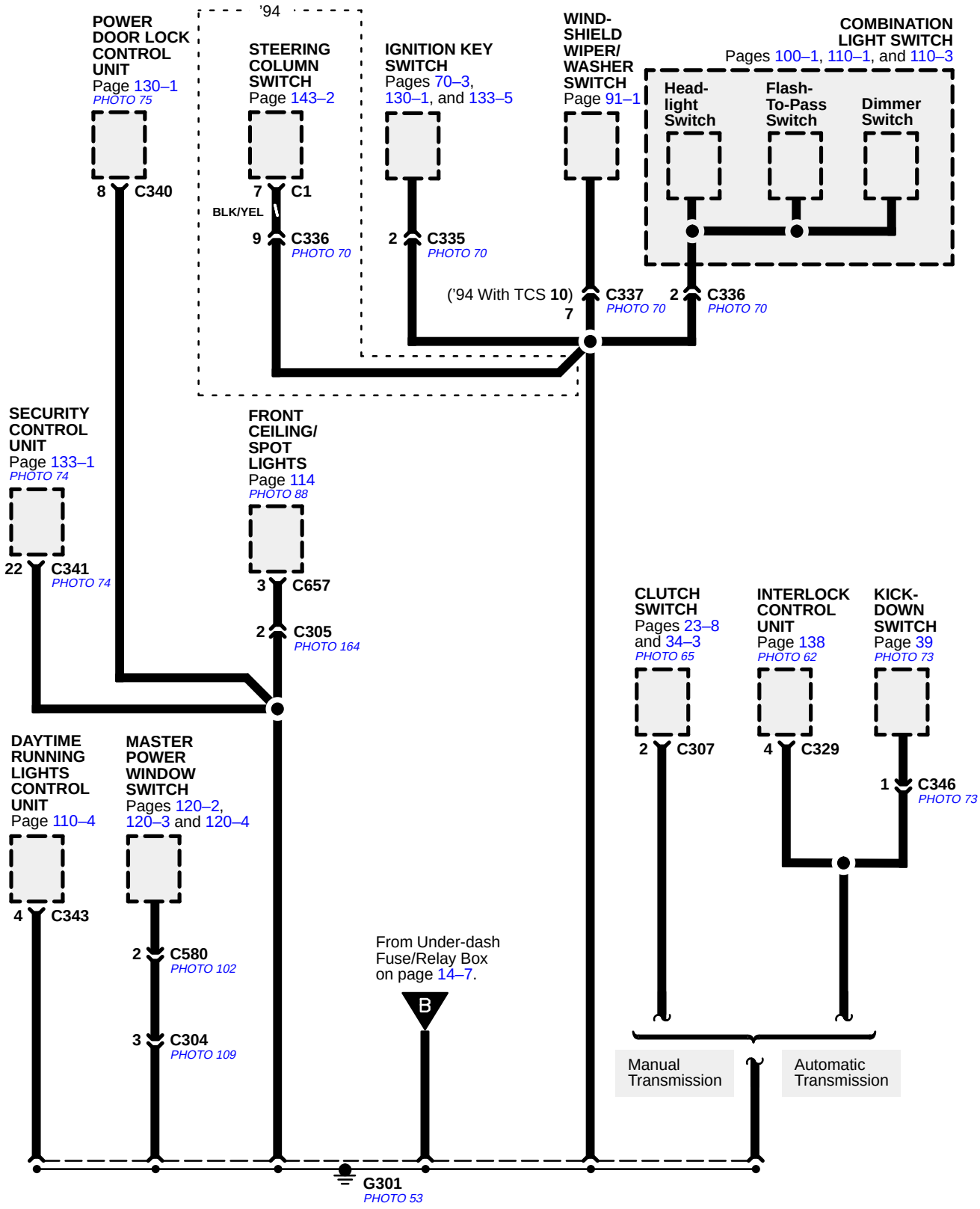


©2004 American Honda Motor Co., Inc.